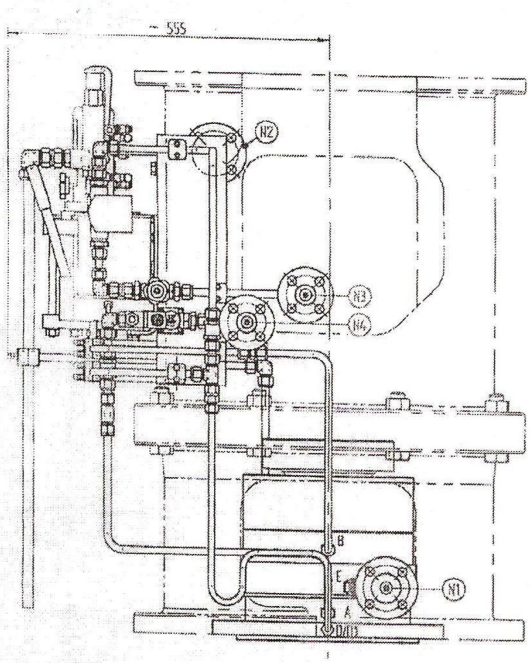

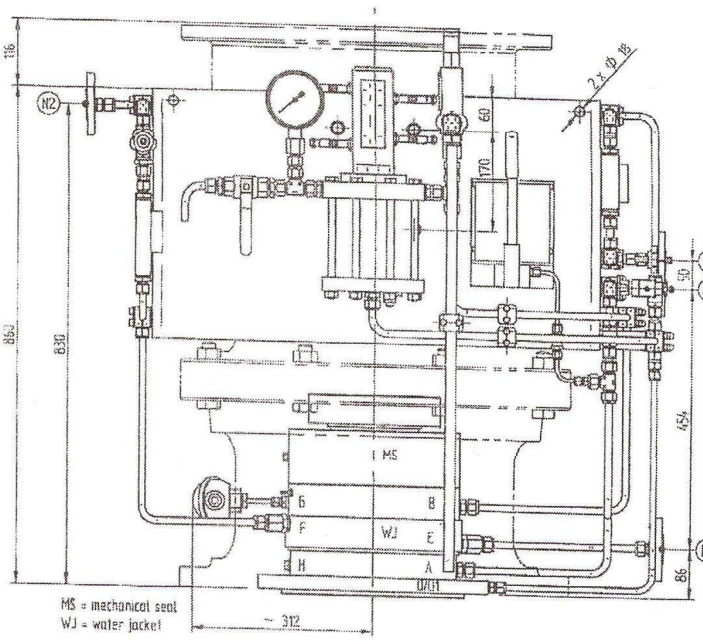

A		G3/8"	I	refill water inlet		
B		G3/8"	I	buffer fluid outlet		
D		G1/4"	I	flush water inlet		
D1		G1/4"	I	pressure compensator		
E		G1/2"	I	cooling water inlet		
F		G1/2"	I	cooling water outlet		
G		G1/4"	I	temperature transmitter		
H		G1/4"	I	plugged		
N4	DN15	1/2"	I	refill water inlet	300	
N3	DN15	1/2"	I	flush water inlet	300	
N2	DN25	1"	I	cooling water outlet	150	
N1	DN25	1"	I	cooling water inlet	150	
Item	Size		QTY	Service	Class	Remarks
					Flange	

Nozzle schedule

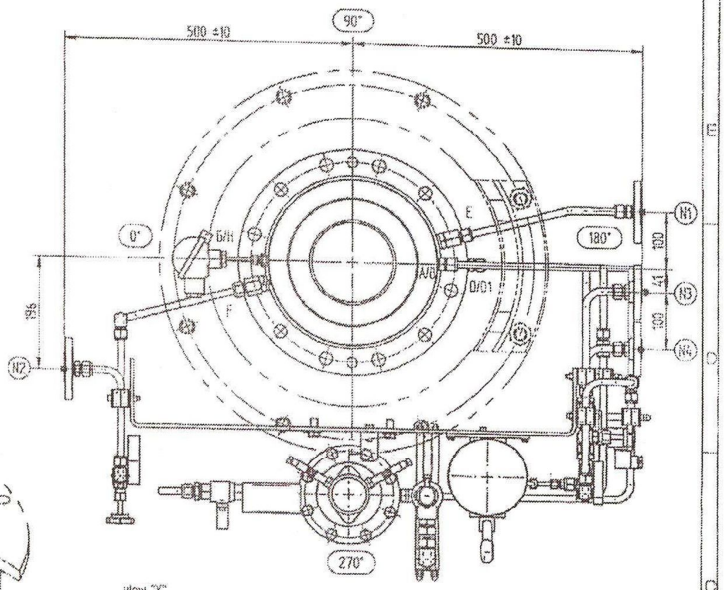

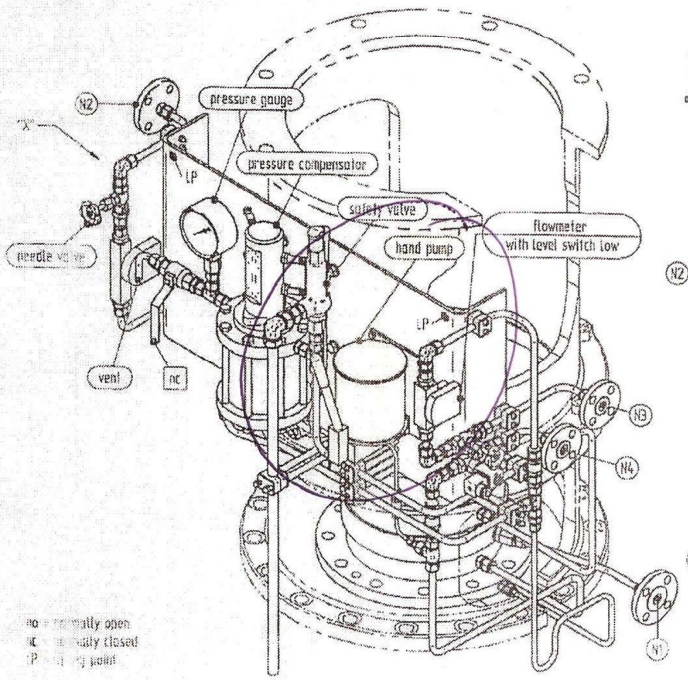

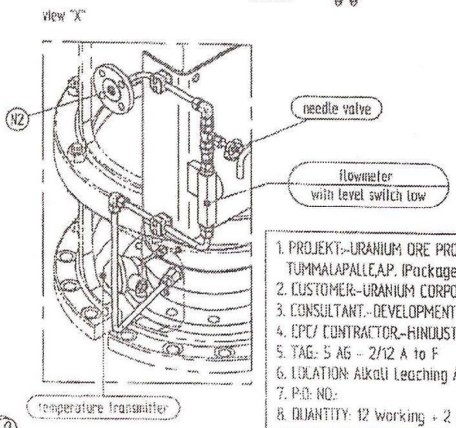

no = normally open
nc = normally closed
LP = [illegible] point

1. PROJEKT:-URANIUM ORE PROCESSING PLANT AT TUMMALAPALLE,A.P. (Package-UCIL-II)
2. CUSTOMER:-URANIUM CORPORATION OF INDIA LTD.
3. CONSULTANT.-DEVELOPMENT CONSULTANT PVT.LTD.
4. EPC/ CONTRACTOR.-HINDUSTAN DORR OLIVER LTD.
5. TAG: 5 AG - 2/12 A to F
6. LOCATION: Alkali Leaching Area
7. P.O. NO.:
8. QUANTITY: 12 Working + 2 Store standby

		Type: UCIL H00	EKATO ESD
Scale: 1:20	Name: Installation outline drawing		Drawing No: 580-99237-03A